Grove Manitowoc National Crane Potain

Grove GMK4115

Product Guide

Features

- 100 t (115 USt) capacity
- 11,3 m - 52 m (37 ft - 171 ft) six-section full-power MEGAFORM™ boom with TWIN-LOCK™ pinning
- 10 m - 17 m (33 ft - 56 ft) hydraulic offset bi-fold swingaway
- 2x5 m (16 ft) intermediate lattice inserts
- 26,1 t (57,500 lb) counterweight with hydraulic removal system
- MEGATRAK™ independent hydro-pneumatic suspension

Features

MEGATRAK™

The MEGATRAK™ suspension system is the best off road driveline available on the market today. The system's versatility and performance allows the GMK4115 to operate as a true all-terrain crane. The MEGATRAK™ independent suspension and all-wheel steer system allows wheels to remain on the ground at all times so stresses and weight are not continually transferred between axles. MEGATRAK™ provides true ground clearance where others just raise the chassis.

Other benefits of the MEGATRAK™ system are:

- A reliable suspension system
- Excellent job site maneuverability with all-wheel steering
- Commonality among almost all models
- A driveline that remains aligned at all times
- A steering linkage system that is protected against damage
- Constant tire contact for equal tire wear
- Reduced maintenance

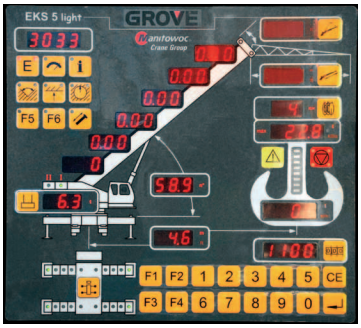

EKS 5 Light

Monitoring the lifting condition of the crane at all times EKS works together with, but independently of the ECOS as a complete command and control system or separately as a load moment indicator.

TWIN-LOCK™

Boom pinning mechanism automatically pins the sections in position using two horizontal pins.

CraneSTAR

CraneSTAR is an exclusive and innovative crane asset management system that helps improve your profitability and reduce costs by remotely monitoring critical crane data. Visit www.cranestar.com for more information.

ECOS

Electronic Crane Operating System - ECOS enables control of the entire crane's principle operations. Simple programming eases lift planning and a supply of essential information allows full concentration on the lift itself.

Contents

Specifications	4
Dimensions	7
Counterweight	8
Travel proposal	9
Working range (main boom)	10
Load charts (main boom)	11
Working range (hydraulic offset swingaway)	16
Load charts (hydraulic offset swingaway)	18
Working range (manual offset swingaway)	24
Load charts (manual offset swingaway)	26
Symbols glossary	29

Specifications

Superstructure

Boom

11,3 m - 52 m (37 ft - 171 ft) six-section, full power MEGAFORM™ boom with TWIN-LOCK™ pinning.

Maximum tip height: 54,7 m (180 ft)

Boom nose

Seven nylatron sheaves, mounted on heavy duty tapered roller bearings with removable pin-type rope guards. Quick reeve boom nose. Removable auxiliary boom nose with removable pin type rope guard.

Boom elevation

Single lift cylinder with safety valve provides boom angle from -1.5° to +82°.

Hydraulic offsettable lattice extension

10 m - 17 m (33 ft – 56 ft) bi-fold lattice swingaway extension, hydraulically offsettable and luffing under load, 0°- 40°.

Maximum tip height: 71,7 m (235 ft)

*Optional offsettable lattice extension

10 m - 17 m (33 ft – 56 ft) bifold lattice swingaway extension, manually offsettable at 0°, 20° and 40°.

Maximum tip height: 71,7 m (235 ft)

*Optional lattice extension

Two 5 m (16 ft) inserts for use with lattice swingaway extension to increase length to 22 m (72 ft) or 27 m (89 ft). Maximum tip height: 81,7m (268 ft)

Load moment and anti-two block system

Load moment and anti-two block system with audio/visual warning and control lever lockout provides electronic display of boom angle, length, radius, tip height, relative load moment, maximum permissible load, load indication and warning of impending two-block condition.

Crane control system

Full electronic control of all crane movements using electrical control levers with automatic reset to zero. Controls are integrated with the LMI and engine management system by CAN-BUS. ECOS system with graphic display.

Cab

All aluminum constructed cab with acoustical lining, hydraulic tilted to 20°. Includes tinted safety glass, adjustable operator's seat with hydraulic suspension, opening windows at side and rear, hinged windshield with wiper, sun visor and window shade. Other features include hot water heater/ defroster, armrest integrated crane controls, drive/steer controls and ergonomically arranged instrumentation.

Swing

2 axial piston planetary gear boxes with fixed displacement motors. Infinitely variable to 1.9 rpm. Free swing with holding (rocker switch) and service (foot pedal) brake.

Counterweight

26,1 t (57,500 lb) consisting of various sections with hydraulic installation/removal system controlled from the superstructure cab.

Engine

Mercedes-Benz OM 904 LA direct injected, after cooled with 110 kW (148 bhp) at 2200 rpm.

Max torque: 580 Nm (428 ft/lb)at 1200 rpm.

Engine emission: EUROMOT/EPA/CARB (non-road)

Fuel tank

Integrated in carrier fuel tank.

Hydraulic system

2 separate circuits, 1 axial piston variable displacement pump (load sensing) with electronic power limiting control and 1 gear pump for swing.

Thermostatically controlled oil coolers keep oil at optimum operating temperature.

Tank capacity: 600 l (158 gal)

Electrical system

24V system with three phase alternator, 28V/80A.

2 batteries 12V/170 Ah.

Denotes optional equipment

Superstructure continued

Hoist

Main and auxiliary hoist are powered by axial piston motor with planetary gear and multiple disc brake. “Thumb-thumper” hoist drum rotation indicator alerts operator of hoist movement.

	Main	Auxiliary
Rope length	255 m (837 ft)	255 m (837 ft)
Rope diameter	17 mm	17 mm
Line speed	120 m/min (394 fpm)	120 m/min (394 fpm)
Line pull	56 kN (12,589 lb)	56 kN (12,589 lb)

*Optional hookblocks

Lifting capacity	Sheaves	Weight	Parts of line	Possible load with the crane*
100 t (110 USt)	7	1000 kg (2200 lb)	2-15	82 t (90 USt)
63 t (70 USt)	5	750 kg (1653 lb)	2-11	61 t (67 USt)
40 t (44 USt)	3	550 kg (1213 lb)	1-7	39 t (43 USt)
20 t (22 USt)	1	300 kg (661 lb)	1-3	17 t (18.7 USt)
8 t (8.8 USt)	H/B	200 kg (440 lb)	1	5,7 t (6.3 USt)

* varies depending on national regulations

*Optional equipment

- Base boom mounted work lights
- Boom mounted aircraft warning light
- Stainless steel exhaust system with spark arrestor
- Diesel heater, also serves as engine preheater
- 24 hour timer for preheater
- Propane heater
- Additional worklight for superstructure cab
- Stereo radio/CD player
- Air conditioning

Carrier

Chassis

Box type, torsion resistant frame is fabricated from high strength steel.

Outrigger system

Four hydraulic single stage outrigger beams with vertical cylinders and outrigger pads, 500 mm (19,7 in) square . Outrigger can be set in 5 positions:

Full	- 7 m (23 ft)
Partial	- 6 m (19.6 ft)
Partial	- 5 m (16.4 ft)
Partial	- 4 m (13.2 ft)
Retracted	- 2,6 m (8.4 ft)

Independent horizontal and vertical movement controlled from each side of carrier and the superstructure cab. Electronic crane level indicators. Includes outrigger monitoring system.

Engine

Mercedes-Benz OM 460 LA direct injected with 315 kW (422 bhp) at 1800 rpm.

Max torque: 2100 Nm (1549 ft/lb) at 1300 rpm.

Engine emission: EUROMOT/EPA/CARB Tier IVi (non-road)

Fuel tank capacity

400 L (106 gal). Supplies superstructure and carrier engines.

Transmission

Daimler Chrysler, G240-16

16 forward and 2 reverse speeds

2 speed transfer case

Drive/steer

8x6x8

Axles

1st axle line – drive/steer
2nd axle line – steer (optional drive)
3rd axle line – drive/steer (connects for all-wheel steer)
4th axle line – drive/steer

Drive axles with planetary hub reduction and center mounted gearing. Standard inter-axle and cross axle differential locks.

Denotes optional equipment

Specifications

Carrier continued

Suspension

Grove exclusive MEGATRAK suspension. Independent hydro-pneumatic system acting on all wheels with hydraulic lockout. Suspension can be raised 170 mm (6.7 in) or lowered 130 mm (5.1 in), both longitudinally and transversely. Features an automatic leveling system for highway travel.

Tires

8 tires, 445/95 R25 (16.00 R25)
(vehicle width – 2,75 m [9.0 ft])

Steering

Dual circuit, hydraulic power assisted steering system. Transfer case mounted, ground driven emergency steering pump. Axles 1, 2, and 4 steer on highway. Separate steering of the 3rd and 4th axles for all wheel and crab steering, controlled by an electronic rocker switch.

Brakes

Service brakes: pneumatic dual circuit acting on all wheels.

Parking brake: pneumatically operated spring loaded brake acting on axle lines 2 and 4.

Standard anti-lock prevention (ABS).

Air dryer.

Cab

Two-man, aluminum construction with the following features: safety glass, driver and passenger seats with hydraulic suspension, engine-dependent hot water heater, power windows, heated rear view mirrors, complete instrumentation and driving controls.

ECOS control of suspension, drive connect and disconnect, inter-axle locks, differential locks and all-wheel steer.

Electrical system

24V system with three phase alternator, 28V/100A

2 batteries, 12V/170 Ah

Maximum speed

85 kph (53 mph)

Gradeability (theoretical)

63.7% - 14.00 tires

56.7% - 16.00/20.5 tires

Miscellaneous standard equipment

Work light; tool kit; fire extinguisher; auxiliary boom nose; radio /CD player in carrier cab, heated rear view mirrors, wind speed indicator, CraneSTAR asset management system.

*Optional equipment

- Stainless steel exhaust system with spark arrestor
- 385/95 R25 tires (14.00 R25)
  (vehicle width 2,75 m [9.0 ft])
- 525/80 R25 tires (20.5 R25)
  (vehicle width 2,88 m [9.8 ft])
- Spare tire and wheel with carry bracket
- 8x8x8 drive/steer (additional drive, axle #2)
- Electric driveline retarder
- Steel outrigger pads
- Outrigger pad load indicator
- Trailer and towing hitches
- Engine independent diesel cab heater, with engine pre-heater
- Timer for diesel heater
- Air conditioning
- Additional strobe lights
- Work lights for outriggers
- Working range limiter
- Wireless remote control for all crane functions
- Data logger
- Rear mounted stowage box
- Optional engine: Tier III Mercedes Benz OM 460 LA, 295 kW (395 hp) at 1800 rpm.
  Max. torque 1900 Nm at 1300 rpm (non-road).

Denotes optional equipment

Dimensions

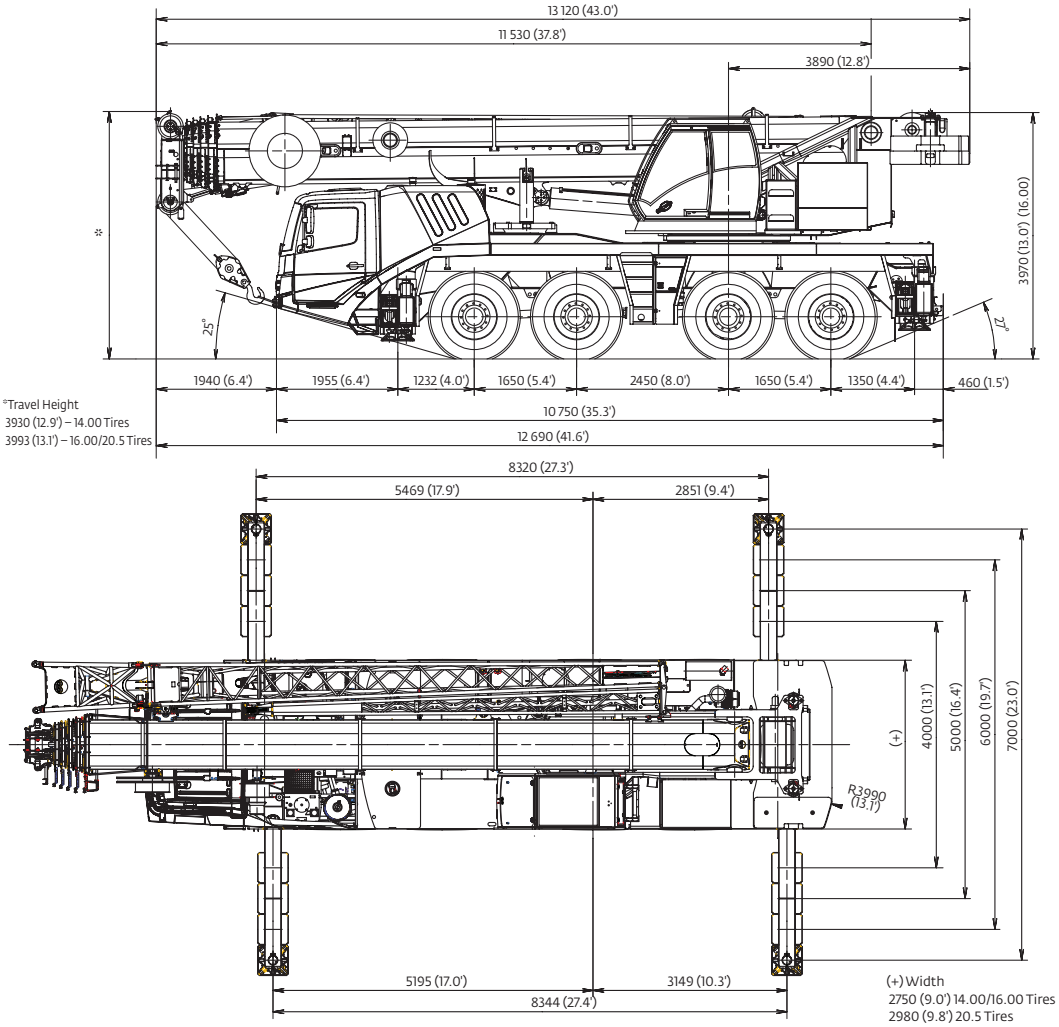

Basic weights	Axles 1 and 2		Axles 3 and 4		Total	
	kg	lb	kg	lb	kg	lb
Mercedes power, Tier 4i, 14.00R25 tires, 8x6x8 drive/steer, 2nd oil cooler, outrigger floats installed, 3,5 t (7716 lb) bolted counterweight	21 477	47,349	21 653	47,737	43 130	95,085
Additions:						
16.00R25 tires plus decking	265	584	265	584	530	1168
20.5R25 tires plus decking	433	955	433	955	866	1910
14.00R25 spare tire with bracket	-179	-395	439	968	260	573
16.00R25 spare tire with bracket	-222	-489	542	1195	320	705
20.5R25 spare tire with bracket	-254	-560	616	1358	362	798
8x8x8 drive/steer	261	575	69	152	330	728
Electric driveline retarder	-27	-60	287	633	260	573
Brackets for swingaway	99	218	-9	-20	90	198
Hose reel for luffing swingaway	339	747	-164	-362	175	386
10 m - 17 m (33 ft - 56 ft) swingaway	1608	3545	-303	-668	1305	2877
Auxiliary boom nose	138	304	-78	-172	60	132
Auxiliary hoist	-154	-340	449	990	295	650
Removals:						
Outrigger floats (front and rear)	-58	-128	-62	-137	-120	-265

THIS CHART IS ONLY A GUIDE AND SHOULD NOT BE USED TO OPERATE THE CRANE.
The individual crane's load chart, operating instructions and other instructional plates must be read and understood prior to operating the crane

Counterweight

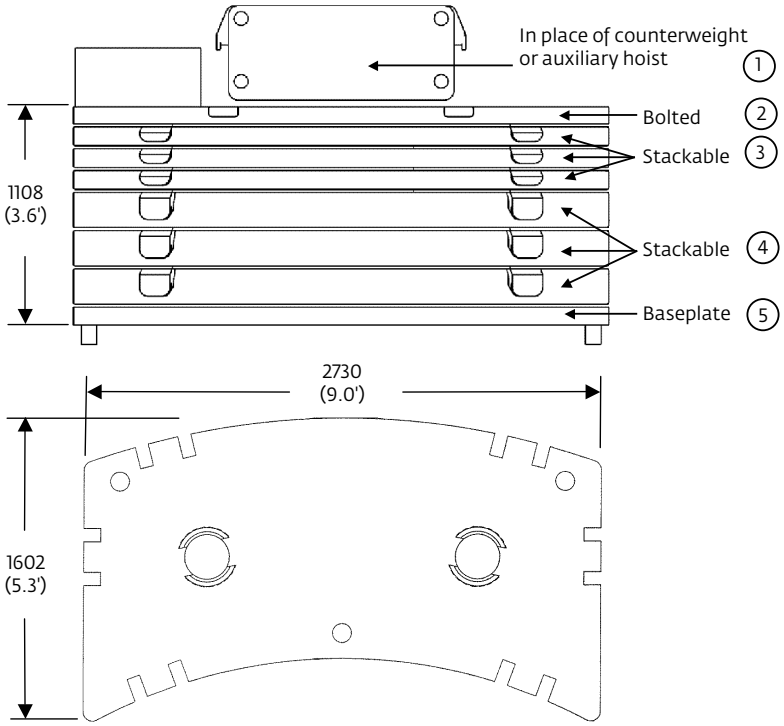

	1	2	3	4	5
	600 kg (1300 lb)	**3500 kg (7700 lb)**	**2200 kg (4850 lb)**	**4400 kg (9700 lb)**	**2200 kg (4850 lb)**
4100 kg (9000 lb	x	x			
6300 kg (13,800 lb)	x	x			X
8500 kg (18,700 lb)	x	x	x		X
10 700 kg (23,500 lb)	x	x		X	X
12 900 kg (28,400 lb)	x	x	x	X	X
15 100 kg (33,200 lb)	x	x		2X	X
17 300 kg (38,100 lb)	x	x	x	2X	X
19 500 kg (42,900 lb)	x	x	2X	2X	X
21 700 kg (47,800 lb)	x	x	X	3X	X
23 900 kg (52,600 lb)	x	x	2X	3X	X
26 100 kg (57,500 lb)	x	x	3X	3X	X

THIS CHART IS ONLY A GUIDE AND SHOULD NOT BE USED TO OPERATE THE CRANE.
The individual crane's load chart, operating instructions and other instructional plates must be read and understood prior to operating the crane

Trailing boom proposal

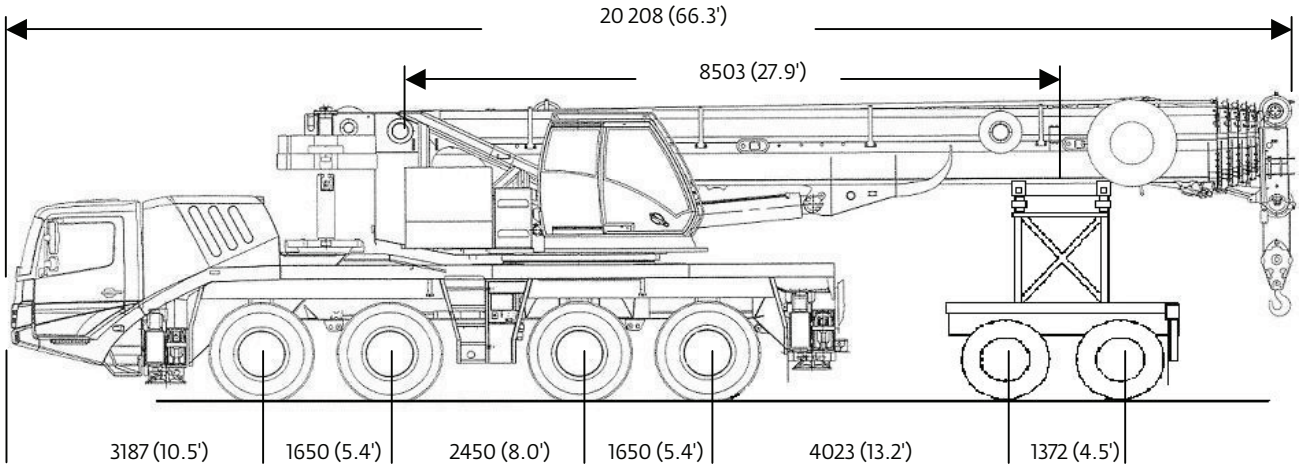

Basic weights								
	Axles 1 and 2		Axles 3 and 4		Dolly		Total	
	kg	lb	kg	lb	kg	lb	kg	lb
Mercedes power,Tier 4i, 16.00 tires, 8x6x8 drive/ steer, outrigger pads stowed, auxiliary hoist, 56 ft swingaway stowed, additional oil cooler, 3500 (7716 lb) counterweight slab bolted to superstructure and 6000 lb boom dolly, 16 USt of extend boom boost with boom telescoped 13 ft	17 664	38,942	17 466	38,505	13 325	29,377	48 455	106,823
Additions:								
14.00R25 tires	-265	-584	-265	-584	-	-	-530	-1168
20.5R25 tires	168	370	168	370	-	-	336	740
8x8x8 drive/steer	261	575	69	152	-	-	330	728
Removals:								
Hydraulic hose reel	14	31	4	9	-194	-428	-175	-387
Brackets for swingaway	-20	-44	-6	-13	-63	-139	-90	-197
10 m - 17 m (33 - 56 ft) swingaway	-231	-509	-72	-159	-1002	-2209	-1305	-2877
Front and rear outrigger floats	-59	-130	-61	-135	-	-	-265	-265

THIS CHART IS ONLY A GUIDE AND SHOULD NOT BE USED TO OPERATE THE CRANE.
The individual crane's load chart, operating instructions and other instructional plates must be read and understood prior to operating the crane

Working range

Main boom

11,3 m - 52 m (31 ft - 171 ft) main boom

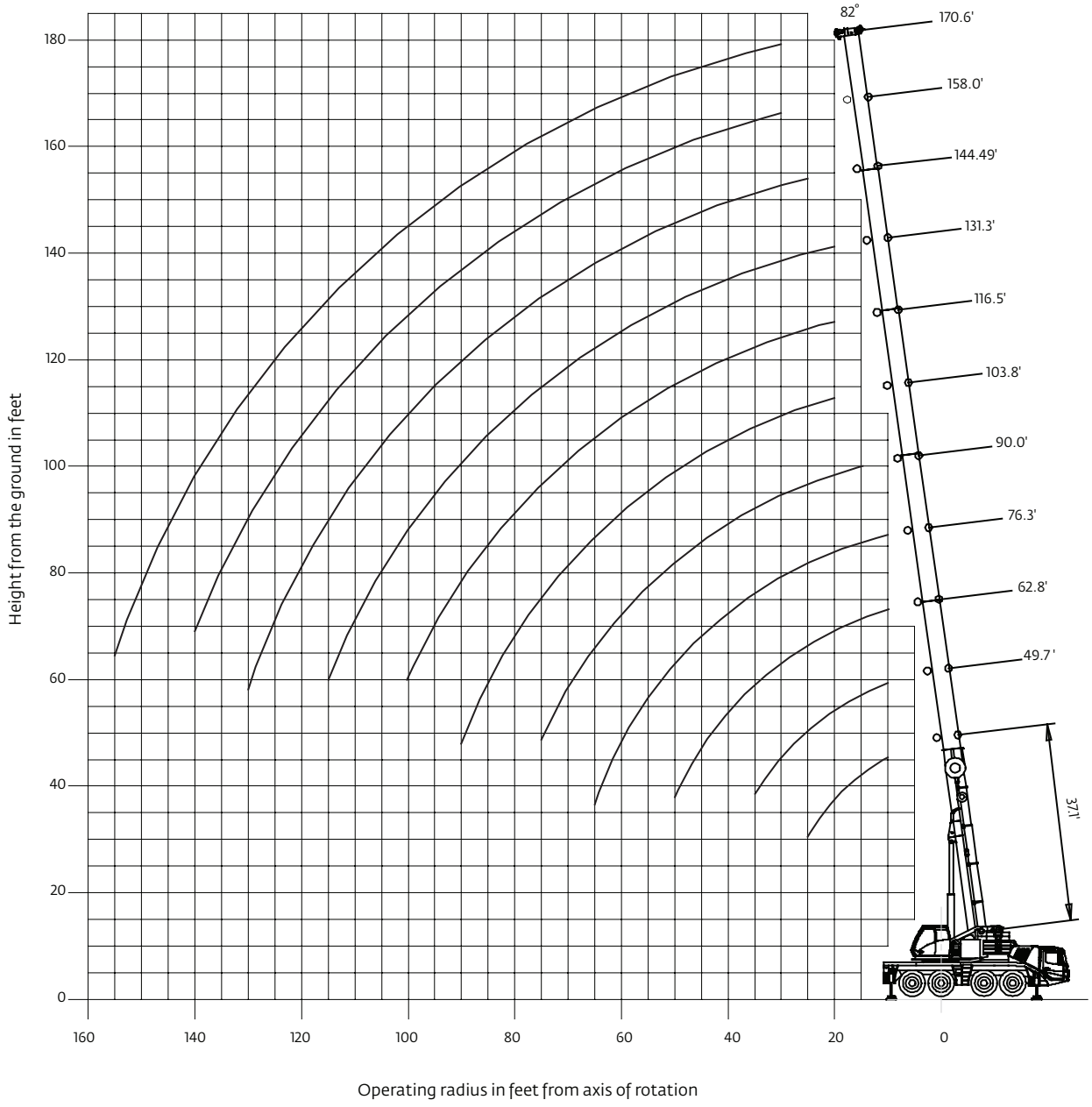

THIS CHART IS ONLY A GUIDE AND SHOULD NOT BE USED TO OPERATE THE CRANE.
The individual crane's load chart, operating instructions and other instructional plates must be read and understood prior to operating the crane

Load chart
Main boom

11,3 m - 52 m
(37 ft - 171 ft)

26 082 kg
(57,500 lb)

7,0 m
(23 ft)
100%

360°

Pounds x 1000

Feet	37.1	49.7	62.8	76.3	90.0	103.8	116.5	131.3	144.9	158.0	170.6	Feet
8	* 230.0											8
10	161.0	146.0	138.0	123.0								10
15	126.0	123.0	115.0	108.0	93.0							15
20	101.0	102.0	95.0	89.0	84.0	71.0	56.0	41.8				20
25	85.0	85.0	80.0	75.0	72.0	65.0	52.0	41.8	32.2			25
30		73.0	70.0	65.0	62.0	58.0	47.0	41.0	32.2	25.4	21.0	30
35		63.0	62.0	56.0	54.0	53.0	42.0	37.8	32.2	25.4	21.0	35
40			52.0	49.0	48.0	47.0	37.6	34.2	31.4	25.4	21.0	40
45			43.2	42.6	41.6	41.6	34.0	31.0	28.8	25.4	21.0	45
50			37.8	37.8	36.0	36.2	30.8	28.4	26.4	24.2	21.0	50
55				32.6	32.4	31.8	28.0	25.6	24.2	22.6	20.8	55
60				28.4	29.6	28.2	25.6	23.2	21.8	21.0	19.6	60
65				24.8	26.2	25.2	24.0	21.4	20.2	19.4	18.4	65
70					23.4	22.4	22.8	19.8	18.8	18.0	17.4	70
75					20.8	19.8	21.0	18.4	17.4	16.8	16.4	75
80						18.6	18.8	16.6	16.0	15.4	15.2	80
85						17.8	16.8	15.4	14.6	14.2	14.0	85
90						16.2	15.2	14.6	13.2	12.8	12.6	90
95							13.8	13.6	12.2	11.8	11.8	95
100							12.4	12.6	11.2	11.0	11.0	100
105								11.8	10.6	10.2	10.2	105
110								10.8	10.2	9.6	9.8	110
115								9.8	9.8	9.2	9.0	115
120									9.0	8.6	8.0	120
125									8.2	8.0	7.2	125
130									7.6	7.2	6.6	130
135										6.6	5.8	135
140										6.0	5.2	140
145											4.6	145
150											4.2	150
155											3.6	155

**Over rear with special equipment*

THIS CHART IS ONLY A GUIDE AND SHOULD NOT BE USED TO OPERATE THE CRANE.
The individual crane's load chart, operating instructions and other instructional plates must be read and understood prior to operating the crane

Load chart

Main boom

11,3 m - 52 m
(37 ft - 171 ft)

23 859 kg
(52,600 lb)

7,0 m
(23 ft)
100%

360°

Pounds x 1000

Feet	37.1	49.7	62.8	76.3	90.0	103.8	116.5	131.3	144.9	158.0	170.6	Feet
10	161.0	146.0	138.0	123.0								10
15	126.0	123.0	115.0	108.0	93.0							15
20	101.0	102.0	95.0	89.0	84.0	71.0	56.0	41.8				20
25	84.0	85.0	80.0	75.0	72.0	65.0	52.0	41.8	32.2			25
30		72.0	70.0	65.0	62.0	58.0	47.0	41.0	32.2	25.4	21.0	30
35		61.0	59.0	56.0	54.0	53.0	42.0	37.8	32.2	25.4	21.0	35
40			49.0	47.0	46.0	46.0	37.6	34.2	31.4	25.4	21.0	40
45			41.0	41.6	39.2	39.4	34.0	31.0	28.8	25.4	21.0	45
50			36.0	35.8	35.4	34.2	30.8	28.4	26.4	24.2	21.0	50
55				30.6	32.0	30.0	28.0	25.6	24.2	22.6	20.8	55
60				26.6	28.0	26.6	25.6	23.2	21.8	21.0	19.6	60
65				24.8	24.6	23.6	24.0	21.4	20.2	19.4	18.4	65
70					21.8	20.8	21.8	19.0	18.8	18.0	17.4	70
75					19.2	19.6	19.4	17.2	17.0	16.8	16.4	75
80						18.4	17.4	16.2	15.4	15.4	15.2	80
85						16.6	15.6	15.4	13.8	14.2	14.0	85
90						15.0	14.0	14.6	12.6	12.8	12.6	90
95							12.6	13.2	11.8	11.6	11.8	95
100							11.4	12.0	11.2	10.8	10.8	100
105								10.8	10.6	10.2	10.0	105
110								9.8	9.8	9.6	9.0	110
115								8.8	9.0	8.8	8.0	115
120									8.2	8.0	7.2	120
125									7.4	7.2	6.4	125
130									6.8	6.4	5.8	130
135										5.8	5.0	135
140										5.2	4.6	140
145											4.0	145
150											3.4	150
155											3.0	155

THIS CHART IS ONLY A GUIDE AND SHOULD NOT BE USED TO OPERATE THE CRANE.
The individual crane's load chart, operating instructions and other instructional plates must be read and understood prior to operating the crane

Load chart
Main boom

11,3 m - 52 m
(37 ft - 171 ft)

19 459 kg
(42,900 lb)

7,0 m
(23 ft)
100%

360°

Pounds x 1000

Feet	37.1	49.7	62.8	76.3	90.0	103.8	116.5	131.3	144.9	158.0	170.6	Feet
10	161.0	146.0	138.0	123.0								**10**
15	125.0	123.0	115.0	108.0	93.0							**15**
20	101.0	101.0	95.0	89.0	84.0	71.0	56.0	41.8				**20**
25	84.0	85.0	80.0	75.0	72.0	65.0	52.0	41.8	32.2			**25**
30		69.0	65.0	61.0	60.0	58.0	47.0	41.0	32.2	25.4	21.0	**30**
35		55.0	53.0	52.0	49.0	49.0	42.0	37.8	32.2	25.4	21.0	**35**
40			45.0	43.4	42.8	40.8	37.6	34.2	31.4	25.4	21.0	**40**
45			37.4	37.0	37.2	35.0	32.8	31.0	28.8	25.4	21.0	**45**
50			31.4	32.0	32.2	30.2	29.8	27.4	26.4	24.2	21.0	**50**
55				28.6	28.0	26.4	26.8	23.8	23.6	22.6	20.8	**55**
60				24.8	24.2	23.4	23.8	20.8	20.8	21.0	19.6	**60**
65				21.6	21.2	21.8	21.2	19.4	18.2	18.6	18.4	**65**
70					18.6	19.8	18.8	18.2	17.0	16.8	16.8	**70**
75					17.4	17.6	16.6	17.0	16.0	15.6	15.0	**75**
80						15.6	14.8	15.4	14.8	14.6	13.4	**80**
85						14.0	13.2	13.6	13.8	13.2	12.0	**85**
90						12.6	12.6	12.2	12.4	12.0	10.8	**90**
95							11.8	11.0	11.0	10.8	9.8	**95**
100							10.6	10.2	10.0	9.8	8.8	**100**
105								9.6	9.2	8.8	8.0	**105**
110								8.8	8.2	7.8	7.0	**110**
115								8.0	7.4	7.0	6.2	**115**
120									6.6	6.2	5.4	**120**
125									6.0	5.6	4.8	**125**
130									5.4	5.0	4.2	**130**
135										4.4	3.6	**135**
140										3.8	3.0	**140**
145											2.6	**145**
150											2.2	**150**
155											1.6	**155**

THIS CHART IS ONLY A GUIDE AND SHOULD NOT BE USED TO OPERATE THE CRANE.
The individual crane's load chart, operating instructions and other instructional plates must be read and understood prior to operating the crane

Load charts

Main boom

11,3 m - 52 m
(37 ft - 171 ft)

12 882 kg
(28,400 lb)

7,0 m
(23 ft)
100%

360°

Pounds x 1000

Feet	37.1	49.7	62.8	76.3	90.0	103.8	116.5	131.3	144.9	158.0	170.6	Feet
10	160.0	146.0	138.0	123.0								10
15	124.0	123.0	115.0	108.0	93.0							15
20	100.0	101.0	93.0	88.0	84.0	71.0	56.0	41.8				20
25	77.0	75.0	70.0	68.0	63.0	62.0	52.0	41.8	32.2			25
30		58.0	56.0	53.0	49.0	49.0	46.0	41.0	32.2	25.4	21.0	30
35		44.0	45.0	43.4	42.8	39.8	28.8	35.6	32.2	25.4	21.0	35
40			36.0	37.6	35.6	33.0	33.2	29.6	29.0	25.4	21.0	40
45			31.0	31.4	30.0	29.8	28.2	25.6	24.4	24.4	21.0	45
50			25.8	26.2	25.6	26.2	24.2	23.8	22.6	22.2	21.0	50
55				22.2	22.6	22.8	21.0	21.0	20.4	19.8	18.4	55
60				19.2	20.4	20.0	19.0	18.4	18.2	17.2	16.0	60
65				16.8	17.8	17.2	17.6	16.6	16.2	15.2	14.0	65
70					15.6	15.0	15.6	15.4	14.4	13.4	12.4	70
75					13.8	13.6	13.8	13.8	12.8	12.0	10.8	75
80						12.6	12.2	12.2	11.4	10.6	9.6	80
85						11.2	10.8	10.8	10.2	9.4	8.4	85
90						9.0	9.8	9.6	9.0	8.4	7.4	90
95							8.8	8.6	8.0	7.6	6.6	95
100							7.8	7.6	7.0	6.6	5.6	100
105								6.8	6.2	5.8	5.0	105
110								6.0	5.4	5.0	4.2	110
115								5.2	4.6	4.2	3.4	115
120									4.0	3.6	2.8	120
125									3.4	3.0	2.4	125
130									3.0	2.6	1.8	130
135										2.0		135
140										1.6		140

11,3 m - 52 m
(37 ft - 171 ft)

8482 kg
(18,700 lb)

7,0 m
(23 ft)
100%

360°

Pounds x 1000

Feet	37.1	49.7	62.8	76.3	90.0	103.8	116.5	131.3	144.9	158.0	170.6	Feet
10	159.0	146.0	138.0	123.0								10
15	123.0	123.0	115.0	108.0	93.0							15
20	99.0	91.0	84.0	80.0	74.0	71.0	56.0	41.8				20
25	65.0	67.0	63.0	59.0	58.0	54.0	50.0	41.8	32.2			25
30		49.0	48.0	48.0	45.0	41.8	41.0	36.8	32.2	25.4	21.0	30
35		36.8	39.2	38.6	36.2	35.4	33.4	30.4	28.8	25.4	21.0	35
40			31.4	31.6	29.6	30.0	27.6	27.4	26.2	23.6	21.0	40
45			25.6	26.0	26.4	25.2	24.0	23.2	22.8	21.6	20.0	45
50			21.2	21.6	23.0	21.6	21.4	20.8	19.6	18.4	17.0	50
55				19.4	19.6	18.6	18.6	18.2	17.0	16.0	14.6	55
60				16.6	16.8	17.2	16.4	15.8	14.8	13.8	12.6	60
65				14.2	14.4	15.0	14.6	14.0	12.8	12.0	10.8	65
70					12.6	13.0	12.8	12.2	11.2	10.6	9.4	70
75					10.8	11.4	11.2	10.8	10.0	9.2	8.2	75
80						10.0	9.8	9.6	8.8	8.0	7.0	80
85						8.8	8.6	8.4	7.6	7.0	6.0	85
90						6.8	7.4	7.2	6.6	6.2	5.2	90
95							6.6	6.4	5.8	5.4	4.4	95
100							5.8	5.6	5.0	4.4	3.6	100
105								4.8	4.2	3.8	3.0	105
110								4.2	3.4	3.0	2.4	110
115								3.6	2.8	2.4	1.8	115
120									2.4	2.0		120
125									1.8			125

THIS CHART IS ONLY A GUIDE AND SHOULD NOT BE USED TO OPERATE THE CRANE.
The individual crane's load chart, operating instructions and other instructional plates must be read and understood prior to operating the crane

Load chart
Main boom

11,3 m - 52 m
(37 ft - 171 ft)

4082 kg
(9000 lb)

7,0 m
(23 ft)
100%

360°

Pounds x 1000

Feet	37.1	49.7	62.8	76.3	90.0	103.8	116.5	131.3	144.9	158.0	170.6	Feet
10	158.0	146.0	138.0	123.0								10
15	123.0	123.0	111.0	100.0	93.0							15
20	83.0	79.0	74.0	68.0	66.0	60.0	44.0	41.8				20
25	53.0	56.0	53.0	52.0	48.0	44.0	43.4	38.2	32.2			25
30		40.2	41.4	39.4	36.8	36.6	33.6	32.8	28.6	25.4	21.0	30
35		30.2	32.2	31.2	29.2	29.4	28.8	27.8	26.0	23.4	21.0	35
40			25.2	25.4	25.8	24.0	23.8	23.0	21.4	20.2	18.6	40
45			20.4	22.0	21.6	21.2	20.4	19.4	18.0	16.8	15.4	45
50			16.6	18.2	18.2	18.2	17.2	16.4	15.2	14.2	13.0	50
55				15.2	15.4	15.6	14.8	14.0	13.0	12.0	10.8	55
60				12.8	13.0	13.4	12.8	12.2	11.2	10.4	9.2	60
65				10.8	11.0	11.4	11.2	10.6	9.6	8.8	7.6	65
70					9.4	9.8	9.6	9.2	8.2	7.4	6.4	70
75					8.0	8.4	8.2	8.0	7.0	6.4	5.4	75
80						7.2	7.0	6.8	6.0	5.4	4.4	80
85						6.2	6.0	5.8	5.2	4.4	3.6	85
90						4.2	5.0	4.8	4.2	3.8	2.8	90
95							4.2	4.0	3.4	3.0	2.0	95
100							3.6	3.4	2.8	2.4	1.4	100
105								2.8	2.2	1.8		105
110								2.2	1.6			110
115								1.6				115

THIS CHART IS ONLY A GUIDE AND SHOULD NOT BE USED TO OPERATE THE CRANE.
The individual crane's load chart, operating instructions and other instructional plates must be read and understood prior to operating the crane

Working range

Hydraulic offset swingaway

52 m (171 ft) main boom with hydraulic luffing 10 m (32.8 ft) and 17 m (55.8 ft) swingaway

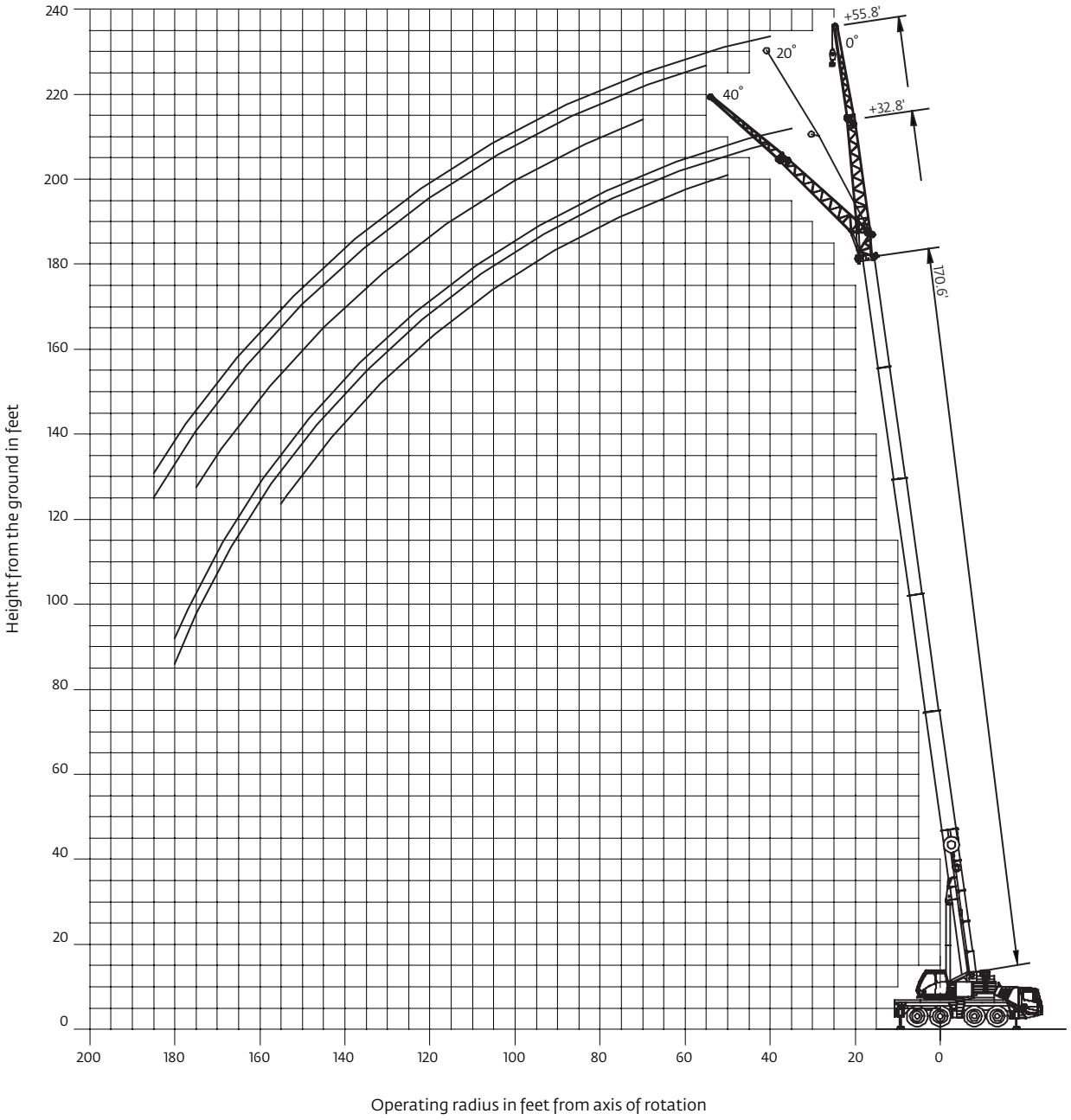

THIS CHART IS ONLY A GUIDE AND SHOULD NOT BE USED TO OPERATE THE CRANE.
The individual crane's load chart, operating instructions and other instructional plates must be read and understood prior to operating the crane

Working range
Hydraulic offset swingaway

52 m (171 ft) main boom with hydraulic luffing 17 m (55.8 ft) swingaway and two 5 m (16 ft) inserts

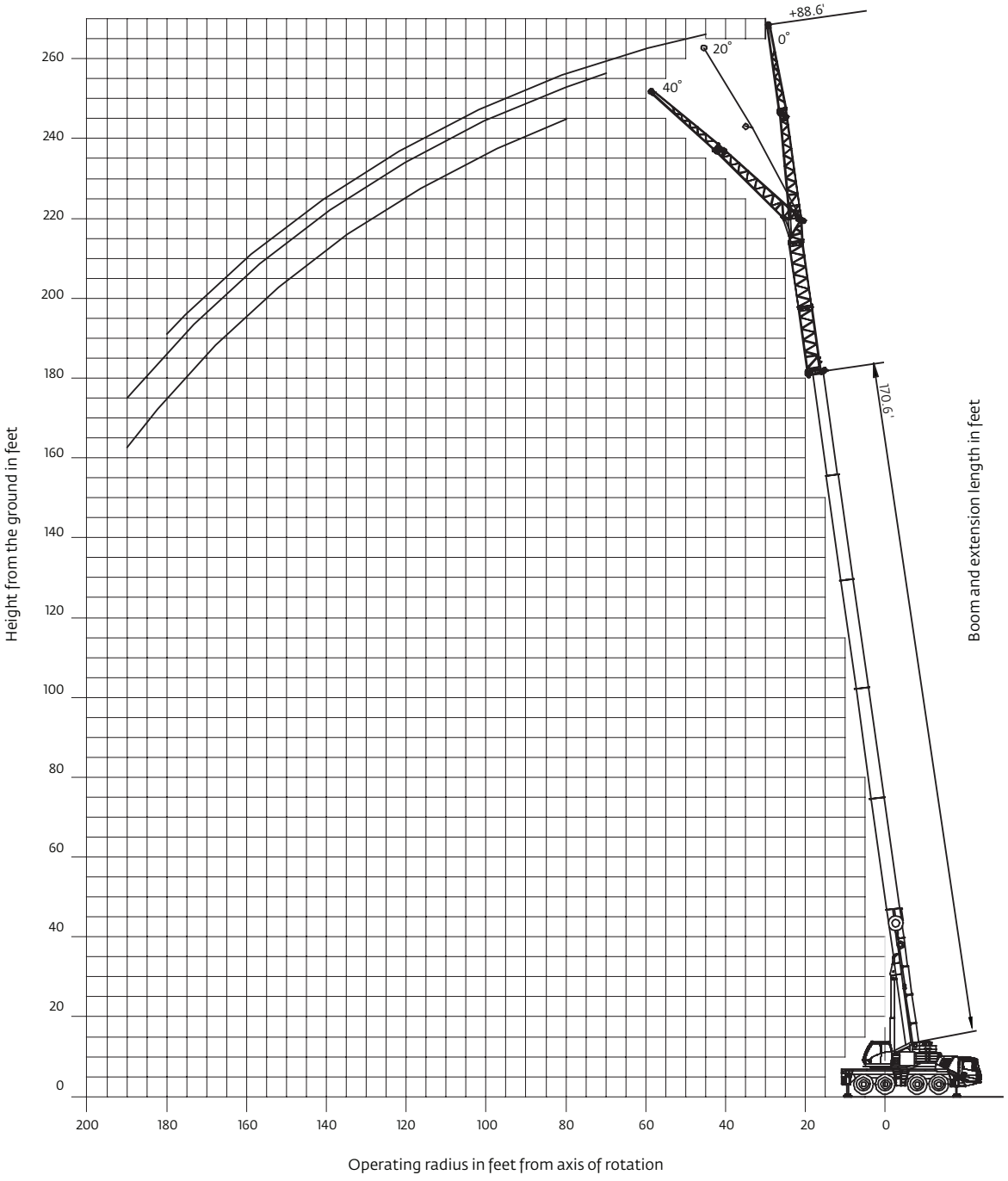

THIS CHART IS ONLY A GUIDE AND SHOULD NOT BE USED TO OPERATE THE CRANE.
The individual crane's load chart, operating instructions and other instructional plates must be read and understood prior to operating the crane

Load chart

Hydraulic offset swingaway

52 m (171 ft)

10-17-22-27 m
(32.8-55.8-72.3-88.6 ft)
Hydraulic luffing
stationary

26 082 kg
(57,500 lb)

7,0 m
(23 ft)
100%

360˚

Pounds x 1000

Feet	170.6 + 32.8			170.6 + 55.8			170.6 + 72.2			170.6 + 88.6			Feet
	0°	0°-20°	20°-40°	0°	0°-20°	20°-40°	0°	0°-20°	20°-40°	0°	0°-20°	20°-40°	
35	10.8												**35**
40	10.8	10.8		7.4			5.8						**40**
45	10.8	10.8		7.4			5.8			4.0			**45**
50	10.8	10.8	10.0	7.4			5.8			4.0			**50**
55	10.8	10.8	10.0	7.7	7.4		5.8			4.0			**55**
60	10.8	10.8	10.0	7.4	7.4		5.8	5.8		4.0			**60**
65	10.8	10.8	10.0	7.4	7.4		5.8	5.8		4.0			**65**
70	10.8	10.8	10.0	7.4	7.4	6.2	5.8	5.8		4.0	4.0		**70**
75	10.8	10.8	10.0	7.4	7.4	6.2	5.8	5.8	5.6	4.0	4.0		**75**
80	10.8	10.8	10.0	7.4	7.4	6.2	5.8	5.8	5.6	4.0	4.0	4.0	**80**
85	10.8	10.4	10.0	7.4	7.4	6.2	5.8	5.8	5.6	4.0	4.0	4.0	**85**
90	10.4	10.0	9.8	7.4	7.2	6.2	5.8	5.8	5.6	4.0	4.0		**90**
95	10.0	9.8	9.6	7.4	7.2	6.0	5.8	5.8	5.6	4.0	4.0	4.0	**95**
100	9.4	9.4	9.2	7.4	7.0	6.0	5.8	5.8	5.6	4.0	4.0	4.0	**100**
105	9.0	9.0	9.0	7.4	6.8	6.0	5.8	5.8	5.6	4.0	4.0	4.0	**105**
110	8.4	8.6	8.6	7.4	6.8	5.8	5.8	5.8	5.6	4.0	4.0	4.0	**110**
115	8.0	8.2	8.4	7.2	6.6	5.8	5.8	5.6	5.6	4.0	4.0	4.0	**115**
120	7.4	7.6	8.0	6.8	6.4	5.8	5.8	5.6	5.4	4.0	4.0	4.0	**120**
125	7.0	7.0	7.6	6.6	6.4	5.8	5.6	5.4	5.2	4.0	4.0	4.0	**125**
130	6.4	6.4	6.8	6.4	6.2	5.6	5.4	5.2	5.0	4.0	4.0	4.0	**130**
135	5.8	5.8	6.2	6.0	6.0	5.6	5.2	5.0	5.0	4.0	4.0	4.0	**135**
140	5.0	5.0	5.4	5.6	5.6	5.6	5.0	4.8	4.8	4.0	4.0	4.0	**140**
145	4.6	4.6	4.8	5.0	5.0	5.6	4.8	4.6	4.6	3.8	3.8	3.8	**145**
150	4.0	4.0	4.4	4.4	4.4	5.2	4.2	4.2	4.6	3.6	3.6	3.6	**150**
155	3.4	3.4	3.8	4.0	4.0	4.6	3.8	3.8	4.4	3.6	3.6	3.6	**155**
160	3.0	3.0		3.6	3.6	4.2	3.4	3.4	4.0	3.2	3.2	3.4	**160**
165	2.6	2.6		3.0	3.0	3.6	2.8	2.8	3.6	2.8	2.8	3.4	**165**
170	2.2	2.2		2.6	2.6	3.2	2.4	2.4	3.0	2.4	2.4	3.0	**170**
175	1.8	1.8		2.2	2.2	2.8	2.0	2.0	2.6	2.0	2.0	2.6	**175**
180	1.4	1.4		2.0	2.0		1.8	1.8	2.2	1.6	1.6	2.2	**180**
185				1.6	1.6				1.8			1.8	**185**
190									1.4			1.6	**190**

THIS CHART IS ONLY A GUIDE AND SHOULD NOT BE USED TO OPERATE THE CRANE.
The individual crane's load chart, operating instructions and other instructional plates must be read and understood prior to operating the crane

Load chart

Hydraulic offset swingaway

52 m (171 ft)

10-17-22-27 m
(32.8-55.8-72.3-88.6 ft)
Hydraulic luffing
loads luffing

26 082 kg
(57,500 lb)

7,0 m
(23 ft)
100%

360˚

Pounds x 1000

Feet	170.6 + 32.8		170.6 + 55.8		170.6 + 72.2		170.6 + 88.6		Feet
	0°-20°	20°-40°	0°-20°	20°-40°	0°-20°	20°-40°	0°-20°	20°-40°	
35									**35**
40	10.8								**40**
45	10.8								**45**
50	10.8	9.4							**50**
55	10.8	9.4	7.2						**55**
60	10.8	9.4	7.2		5.8				**60**
65	10.8	9.4	7.2		5.8				**65**
70	10.8	9.4	7.2	6.0	5.8		4.0		**70**
75	10.8	9.4	7.2	6.0	5.8	5.2	4.0		**75**
80	10.4	9.4	7.2	6.0	5.8	5.2	4.0	4.0	**80**
85	10.0	9.4	7.0	6.0	5.8	5.2	4.0	4.0	**85**
90	9.6	9.4	6.8	5.8	5.8	5.2	4.0	4.0	**90**
95	9.2	9.2	6.6	5.8	5.8	5.2	4.0	4.0	**95**
100	8.8	8.8	6.4	5.6	5.8	5.2	4.0	4.0	**100**
105	8.6	8.6	6.2	5.6	5.8	5.2	4.0	4.0	**105**
110	8.2	8.2	6.0	5.4	5.6	5.2	4.0	4.0	**110**
115	7.8	8.0	6.0	5.4	5.4	5.2	4.0	4.0	**115**
120	7.4	7.6	5.8	5.4	5.2	5.2	4.0	4.0	**120**
125	6.6	7.2	5.6	5.2	5.0	5.0	4.0	4.0	**125**
130	6.0	6.4	5.6	5.2	5.0	4.8	4.0	4.0	**130**
135	5.4	5.8	5.4	5.2	4.8	4.8	3.8	3.8	**135**
140	4.8	5.2	5.2	5.2	4.6	4.6	3.8	3.8	**140**
145	4.4	4.6	4.8	5.0	4.4	4.4	3.6	3.6	**145**
150	3.8	4.2	4.2	4.8	4.2	4.4	3.4	3.4	**150**
155	3.4	3.6	3.8	4.4	3.6	4.2	3.4	3.4	**155**
160	3.0		3.4	4.0	3.2	3.8	3.2	3.2	**160**
165	2.6		3.0	3.6	2.8	3.4	2.8	3.2	**165**
170	2.2		2.6	3.2	2.4	3.0	2.4	3.0	**170**
175	1.8		2.2	2.8	2.0	2.6	2.0	2.6	**175**
180	1.4		2.0		1.8	2.2	1.6	2.2	**180**
185			1.6			1.8		1.8	**185**
190						1.4		1.6	**190**

THIS CHART IS ONLY A GUIDE AND SHOULD NOT BE USED TO OPERATE THE CRANE.
The individual crane's load chart, operating instructions and other instructional plates must be read and understood prior to operating the crane

Load chart

Hydraulic offset swingaway

52 m (171 ft)

10-17-22-27 m
(32.8-55.8-72.3-88.6 ft)
Hydraulic luffing
stationary

23 859 kg
(52,600 lb)

7,0 m
(23 ft)
100%

360°

Pounds x 1000

Feet	170.6 + 32.8			170.6 + 55.8			170.6 + 72.2			170.6 + 88.6			Feet
	0°	0°-20°	20°-40°	0°	0°-20°	20°-40°	0°	0°-20°	20°-40°	0°	0°-20°	20°-40°	
35	10.8												**35**
40	10.8	10.8		7.4			5.8						**40**
45	10.8	10.8		7.4			5.8			4.0			**45**
50	10.8	10.8	10.0	7.4			5.8			4.0			**50**
55	10.8	10.8	10.0	7.7	7.4		5.8			4.0			**55**
60	10.8	10.8	10.0	7.4	7.4		5.8	5.8		4.0			**60**
65	10.8	10.8	10.0	7.4	7.4		5.8	5.8		4.0			**65**
70	10.8	10.8	10.0	7.4	7.4	6.2	5.8	5.8		4.0	4.0		**70**
75	10.8	10.8	10.0	7.4	7.4	6.2	5.8	5.8	5.6	4.0	4.0		**75**
80	10.8	10.8	10.0	7.4	7.4	6.2	5.8	5.8	5.6	4.0	4.0	4.0	**80**
85	10.8	10.4	10.0	7.4	7.4	6.2	5.8	5.8	5.6	4.0	4.0	4.0	**85**
90	10.4	10.0	9.8	7.4	7.2	6.2	5.8	5.8	5.6	4.0	4.0	4.0	**90**
95	10.0	9.8	9.6	7.4	7.2	6.0	5.8	5.8	5.6	4.0	4.0	4.0	**95**
100	9.4	9.4	9.2	7.4	7.0	6.0	5.8	5.8	5.6	4.0	4.0	4.0	**100**
105	9.0	9.0	9.0	7.4	6.8	6.0	5.8	5.8	5.6	4.0	4.0	4.0	**105**
110	8.4	8.4	8.6	7.4	6.8	5.8	5.8	5.8	5.6	4.0	4.0	4.0	**110**
115	7.6	7.6	8.2	7.2	6.6	5.8	5.8	5.6	5.6	4.0	4.0	4.0	**115**
120	7.0	7.0	7.4	6.8	6.4	5.8	5.8	5.6	5.4	4.0	4.0	4.0	**120**
125	6.2	6.2	6.8	6.6	6.4	5.8	5.6	5.4	5.2	4.0	4.0	4.0	**125**
130	5.6	5.6	6.0	6.0	6.0	5.6	5.4	5.2	5.0	4.0	4.0	4.0	**130**
135	5.0	5.0	5.4	5.4	5.4	5.6	5.0	5.0	5.0	4.0	4.0	4.0	**135**
140	4.4	4.4	4.8	4.8	4.8	5.6	4.6	4.6	4.8	4.0	4.0	4.0	**140**
145	3.8	3.8	4.2	4.2	4.2	5.0	4.0	4.0	4.6	3.8	3.8	3.8	**145**
150	3.2	3.2	3.6	3.8	3.8	4.4	3.6	3.6	4.2	3.4	3.4	3.6	**150**
155	2.8	2.8	3.2	3.4	3.4	4.0	3.2	3.2	3.8	3.0	3.0	3.6	**155**
160	2.4	2.4		2.8	2.8	3.4	2.6	2.6	3.4	2.6	2.6	3.2	**160**
165	2.0	2.0		2.4	2.4	3.0	2.2	2.2	3.0	2.2	2.2	2.8	**165**
170	1.6	1.6		2.0	2.0	2.6	1.8	1.8	2.4	1.8	1.8	2.4	**170**
175				1.6	1.6	2.2	1.6	1.6	2.0	1.4	1.4	2.0	**175**
180									1.6			1.6	**180**

THIS CHART IS ONLY A GUIDE AND SHOULD NOT BE USED TO OPERATE THE CRANE.
The individual crane's load chart, operating instructions and other instructional plates must be read and understood prior to operating the crane

Load chart

Hydraulic offset swingaway

52 m (171 ft)

10-17-22-27 m
(32.8-55.8-72.3-88.6 ft)
Hydraulic luffing
loads luffing

23 859 kg
(52,600 lb)

7,0 m
(23 ft)
100%

360˚

Pounds x 1000

Feet	170.6 + 32.8		170.6 + 55.8		170.6 + 72.2		170.6 + 88.6		Feet
	0°-20°	20°-40°	0°-20°	20°-40°	0°-20°	20°-40°	0°-20°	20°-40°	
35									**35**
40	10.8								**40**
45	10.8								**45**
50	10.8	9.4							**50**
55	10.8	9.4	7.2						**55**
60	10.8	9.4	7.2		5.8				**60**
65	10.8	9.4	7.2		5.8				**65**
70	10.8	9.4	7.2	6.0	5.8		4.0		**70**
75	10.8	9.4	7.2	6.0	5.8	5.2	4.0		**75**
80	10.4	9.4	7.2	6.0	5.8	5.2	4.0	4.0	**80**
85	10.0	9.4	7.0	6.0	5.8	5.2	4.0	4.0	**85**
90	9.6	9.4	6.8	5.8	5.8	5.2	4.0	4.0	**90**
95	9.2	9.2	6.6	5.8	5.8	5.2	4.0	4.0	**95**
100	8.8	8.8	6.4	5.6	5.8	5.2	4.0	4.0	**100**
105	8.6	8.6	6.2	5.6	5.8	5.2	4.0	4.0	**105**
110	8.2	8.2	6.0	5.4	5.6	5.2	4.0	4.0	**110**
115	7.4	8.0	6.0	5.4	5.4	5.2	4.0	4.0	**115**
120	6.6	7.2	5.8	5.4	5.2	5.2	4.0	4.0	**120**
125	6.0	6.4	5.6	5.2	5.0	5.0	4.0	4.0	**125**
130	5.4	5.8	5.6	5.2	5.0	4.8	4.0	4.0	**130**
135	4.8	5.2	5.2	5.2	4.8	4.8	3.8	3.8	**135**
140	4.2	4.6	4.6	5.2	4.6	4.6	3.8	3.8	**140**
145	3.8	4.0	4.2	4.8	4.0	4.4	3.6	3.6	**145**
150	3.2	3.6	3.6	4.2	3.6	4.2	3.4	3.4	**150**
155	2.8	3.0	3.2	3.8	3.2	3.8	3.0	3.4	**155**
160	2.4		2.8	3.4	2.6	3.2	2.6	3.2	**160**
165	2.0		2.4	3.0	2.2	2.8	2.2	2.8	**165**
170	1.6		2.0	2.6	1.8	2.4	1.8	2.4	**170**
175			1.6	2.2	1.6	2.0	1.4	2.0	**175**
180						1.6		1.6	**180**

THIS CHART IS ONLY A GUIDE AND SHOULD NOT BE USED TO OPERATE THE CRANE.
The individual crane's load chart, operating instructions and other instructional plates must be read and understood prior to operating the crane

Load chart

Hydraulic offset swingaway

52 m (171 ft)

10-17-22-27 m
(32.8-55.8-72.3-88.6 ft)
Hydraulic luffing
stationary

19 459 kg
(42,900 lb)

7,0 m
(23 ft)
100%

360 °

Pounds x 1000

Feet	170.6 + 32.8			170.6 + 55.8			170.6 + 72.2			170.6 + 88.6			Feet
	0°	0°-20°	20°-40°	0°	0°-20°	20°-40°	0°	0°-20°	20°-40°	0°	0°-20°	20°-40°	
35	10.8												**35**
40	10.8	10.8		7.4			5.8						**40**
45	10.8	10.8		7.4			5.8			4.0			**45**
50	10.8	10.8	10.0	7.4			5.8			4.0			**50**
55	10.8	10.8	10.0	7.7	7.4		5.8			4.0			**55**
60	10.8	10.8	10.0	7.4	7.4		5.8	5.8		4.0			**60**
65	10.8	10.8	10.0	7.4	7.4		5.8	5.8		4.0			**65**
70	10.8	10.8	10.0	7.4	7.4	6.2	5.8	5.8		4.0	4.0		**70**
75	10.8	10.8	10.0	7.4	7.4	6.2	5.8	5.8	5.6	4.0	4.0		**75**
80	10.8	10.8	10.0	7.4	7.4	6.2	5.8	5.8	5.6	4.0	4.0	4.0	**80**
85	10.8	10.4	10.0	7.4	7.4	6.2	5.8	5.8	5.6	4.0	4.0	4.0	**85**
90	10.2	10.0	9.8	7.4	7.2	6.2	5.8	5.8	5.6	4.0	4.0	4.0	**90**
95	9.2	9.2	9.6	7.4	7.2	6.0	5.8	5.8	5.6	4.0	4.0	4.0	**95**
100	8.2	8.2	8.8	7.4	7.0	6.0	5.8	5.8	5.6	4.0	4.0	4.0	**100**
105	7.4	7.4	8.0	7.4	6.8	6.0	5.8	5.8	5.6	4.0	4.0	4.0	**105**
110	6.6	6.6	7.2	6.8	6.8	5.8	5.8	5.8	5.6	4.0	4.0	4.0	**110**
115	5.8	5.8	6.4	6.2	6.2	5.8	5.8	5.6	5.6	4.0	4.0	4.0	**115**
120	5.2	5.2	5.8	5.6	5.6	5.8	5.2	5.2	5.4	4.0	4.0	4.0	**120**
125	4.6	4.6	5.0	5.0	5.0	5.8	4.6	4.6	5.2	4.0	4.0	4.0	**125**
130	4.0	4.0	4.4	4.4	4.4	5.2	4.0	4.0	5.0	3.8	3.8	4.0	**130**
135	3.4	3.4	3.8	3.8	3.8	4.6	3.6	3.6	4.4	3.4	3.4	4.0	**135**
140	2.8	2.8	3.2	3.4	3.4	4.2	3.0	3.0	3.8	3.0	3.0	3.8	**140**
145	2.4	2.4	2.8	3.0	3.0	3.6	2.6	2.6	3.4	2.6	2.6	3.2	**145**
150	2.0	2.0	2.2	2.4	2.4	3.2	2.2	2.2	3.0	2.2	2.2	2.8	**150**
155	1.6	1.6	1.8	2.0	2.0	2.6	1.8	1.8	2.6	1.8	1.8	2.4	**155**
160				1.6	1.6	2.2			2.2			2.0	**160**
165						1.8			1.6			1.6	**165**

THIS CHART IS ONLY A GUIDE AND SHOULD NOT BE USED TO OPERATE THE CRANE.
The individual crane's load chart, operating instructions and other instructional plates must be read and understood prior to operating the crane

Load chart

Hydraulic offset swingaway

52 m (171 ft)

10-17-22-27 m
(32.8-55.8-72.3-88.6 ft)
Hydraulic luffing
loads luffing

19 459 kg
(42,900 lb)

7,0 m
(23 ft)
100%

360°

Pounds x 1000

Feet	170.6 + 32.8		170.6 + 55.8		170.6 + 72.2		170.6 + 88.6		Feet
	0°-20°	20°-40°	0°-20°	20°-40°	0°-20°	20°-40°	0°-20°	20°-40°	
35									**35**
40	10.8								**40**
45	10.8								**45**
50	10.8	9.4							**50**
55	10.8	9.4	7.2						**55**
60	10.8	9.4	7.2		5.8				**60**
65	10.8	9.4	7.2		5.8				**65**
70	10.8	9.4	7.2	6.0	5.8		4.0		**70**
75	10.8	9.4	7.2	6.0	5.8	5.2	4.0		**75**
80	10.4	9.4	7.2	6.0	5.8	5.2	4.0	4.0	**80**
85	10.0	9.4	7.0	6.0	5.8	5.2	4.0	4.0	**85**
90	9.6	9.4	6.8	5.8	5.8	5.2	4.0	4.0	**90**
95	9.2	9.2	6.6	5.8	5.8	5.2	4.0	4.0	**95**
100	8.2	8.8	6.4	5.6	5.8	5.2	4.0	4.0	**100**
105	7.4	8.0	6.2	5.6	5.8	5.2	4.0	4.0	**105**
110	6.6	7.2	6.0	5.4	5.6	5.2	4.0	4.0	**110**
115	5.8	6.4	6.0	5.4	5.4	5.2	4.0	4.0	**115**
120	5.2	5.6	5.6	5.4	5.2	5.2	4.0	4.0	**120**
125	4.6	5.0	5.0	5.2	4.6	5.0	4.0	4.0	**125**
130	4.0	4.4	4.4	5.2	4.0	4.8	3.8	4.0	**130**
135	3.4	3.8	3.8	4.6	3.6	4.4	3.4	3.8	**135**
140	2.8	3.2	3.4	4.0	3.0	3.8	3.0	3.8	**140**
145	2.4	2.8	3.0	3.6	2.6	3.4	2.6	3.2	**145**
150	2.0	2.2	2.4	3.2	2.2	3.0	2.2	2.8	**150**
155	1.6	1.8	2.0	2.6	1.8	2.6	1.8	2.4	**155**
160			1.6	2.2		2.2		2.0	**160**
165				1.8		1.6		1.6	**165**

Working range
Manual offset swingaway

52 m (171 ft) main boom with manual offset 10 m (32.8 ft) and 17 m (55.8 ft) swingaway

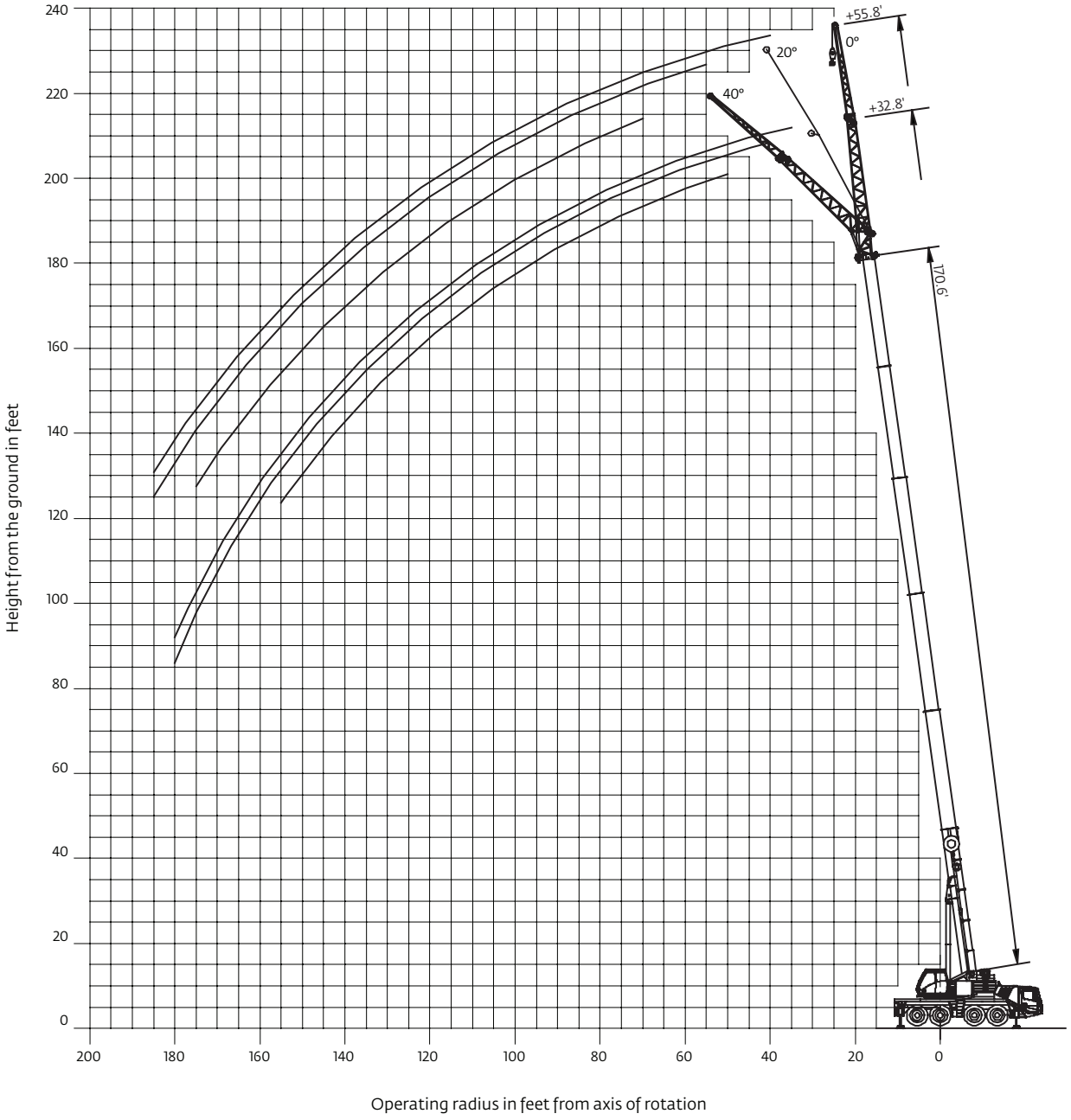

THIS CHART IS ONLY A GUIDE AND SHOULD NOT BE USED TO OPERATE THE CRANE.
The individual crane's load chart, operating instructions and other instructional plates must be read and understood prior to operating the crane

Working range
Manual offset swingaway

52 m (171 ft) main boom with manual offset 17 m (55.8 ft) swingaway and two 5 m (16 ft) inserts

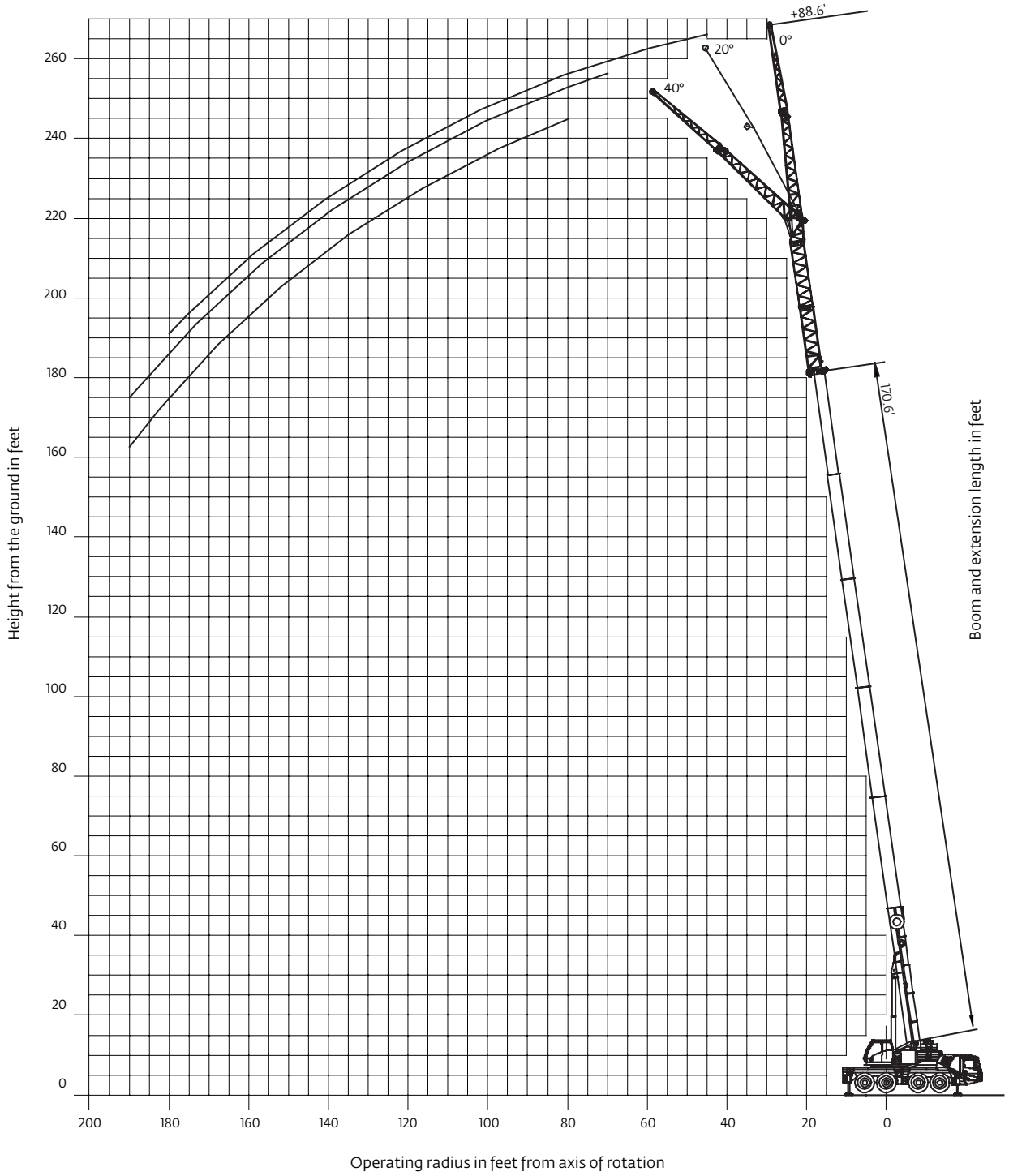

THIS CHART IS ONLY A GUIDE AND SHOULD NOT BE USED TO OPERATE THE CRANE.
The individual crane's load chart, operating instructions and other instructional plates must be read and understood prior to operating the crane

Load chart

Manual offset swingaway

52 m (171 ft)

10-17-22-27 m
(32.8-55.8-72.3-88.6 ft)
Hydraulic luffing
stationary

26 082 kg
(57,500 lb)

7,0 m
(23 ft)
100%

360˚

Pounds x 1000

Feet	170.6 + 32.8			170.6 + 55.8			170.6 + 72.2			170.6 + 88.6			Feet
	0°	20°	40°	0°	20°	40°	0°	20°	40°	0°	20°	40°	
35	10.8												**35**
40	10.8	10.8		7.4			5.8						**40**
45	10.8	10.8		7.4			5.8			4.0			**45**
50	10.8	10.8	10.0	7.4			5.8			4.0			**50**
55	10.8	10.8	10.0	7.7	7.4		5.8			4.0			**55**
60	10.8	10.8	10.0	7.4	7.4		5.8	5.8		4.0			**60**
65	10.8	10.8	10.0	7.4	7.4		5.8	5.8		4.0			**65**
70	10.8	10.8	10.0	7.4	7.4	6.2	5.8	5.8		4.0	4.0		**70**
75	10.8	10.8	10.0	7.4	7.4	6.2	5.8	5.8	5.6	4.0	4.0		**75**
80	10.8	10.8	10.0	7.4	7.4	6.2	5.8	5.8	5.6	4.0	4.0	4.0	**80**
85	10.8	10.4	10.0	7.4	7.4	6.2	5.8	5.8	5.6	4.0	4.0	4.0	**85**
90	10.4	10.0	9.8	7.4	7.2	6.2	5.8	5.8	5.6	4.0	4.0	4.0	**90**
95	10.0	9.8	9.6	7.4	7.2	6.0	5.8	5.8	5.6	4.0	4.0	4.0	**95**
100	9.4	9.4	9.2	7.4	7.0	6.0	5.8	5.8	5.6	4.0	4.0	4.0	**100**
105	9.0	9.0	9.0	7.4	6.8	6.0	5.8	5.8	5.6	4.0	4.0	4.0	**105**
110	8.4	8.6	8.6	7.4	6.8	5.8	5.8	5.8	5.6	4.0	4.0	4.0	**110**
115	8.0	8.2	8.4	7.2	6.6	5.8	5.8	5.6	5.6	4.0	4.0	4.0	**115**
120	7.4	7.6	8.0	6.8	6.4	5.8	5.8	5.6	5.4	4.0	4.0	4.0	**120**
125	7.0	7.2	7.6	6.6	6.4	5.8	5.6	5.4	5.2	4.0	4.0	4.0	**125**
130	6.4	6.8	7.0	6.4	6.2	5.6	5.4	5.2	5.0	4.0	4.0	4.0	**130**
135	5.8	6.2	6.4	6.0	6.0	5.6	5.2	5.0	5.0	4.0	4.0	4.0	**135**
140	5.0	5.4	5.6	5.6	5.8	5.6	5.0	4.8	4.8	4.0	4.0	4.0	**140**
145	4.6	4.8	5.0	5.0	5.6	5.6	4.8	4.6	4.6	3.8	3.8	3.8	**145**
150	4.0	4.4	4.4	4.4	5.2	5.4	4.2	4.6	4.6	3.6	3.6	3.6	**150**
155	3.4	3.8	3.8	4.0	4.6	5.0	3.8	4.4	4.4	3.6	3.6	3.6	**155**
160	3.0	3.2		3.6	4.2	4.4	3.4	4.0	4.2	3.2	3.4	3.4	**160**
165	2.6	2.8		3.0	3.6	4.0	2.8	3.6	4.0	2.8	3.2	3.4	**165**
170	2.2	2.4		2.6	3.2	3.4	2.4	3.0	3.4	2.4	3.0	3.2	**170**
175	1.8	2.0		2.2	2.8	3.0	2.0	2.6	3.0	2.0	2.6	3.0	**175**
180	1.4	1.6		2.0	2.4		1.8	2.2	2.4	1.6	2.2	2.6	**180**
185				1.6	2.0			1.8	2.0		1.8	2.2	**185**
190					1.6			1.4	1.6		1.6	1.8	**190**

THIS CHART IS ONLY A GUIDE AND SHOULD NOT BE USED TO OPERATE THE CRANE.
The individual crane's load chart, operating instructions and other instructional plates must be read and understood prior to operating the crane

Load chart

Manual offset swingaway

52 m (171 ft)

10-17-22-27 m
(32.8-55.8-72.3-88.6 ft)
Hydraulic luffing
stationary

23 859 kg
(52,600 lb)

7,0 m
(23 ft)
100%

360˚

Pounds x 1000

Feet	170.6 + 32.8			170.6 + 55.8			170.6 + 72.2			170.6 + 88.6			Feet
	0°	20°	40°	0°	20°	40°	0°	20°	40°	0°	20°	40°	
35	10.8												**35**
40	10.8	10.8		7.4			5.8						**40**
45	10.8	10.8		7.4			5.8			4.0			**45**
50	10.8	10.8	10.0	7.4			5.8			4.0			**50**
55	10.8	10.8	10.0	7.7	7.4		5.8			4.0			**55**
60	10.8	10.8	10.0	7.4	7.4		5.8	5.8		4.0			**60**
65	10.8	10.8	10.0	7.4	7.4		5.8	5.8		4.0			**65**
70	10.8	10.8	10.0	7.4	7.4	6.2	5.8	5.8		4.0	4.0		**70**
75	10.8	10.8	10.0	7.4	7.4	6.2	5.8	5.8	5.6	4.0	4.0		**75**
80	10.8	10.8	10.0	7.4	7.4	6.2	5.8	5.8	5.6	4.0	4.0	4.0	**80**
85	10.8	10.4	10.0	7.4	7.4	6.2	5.8	5.8	5.6	4.0	4.0	4.0	**85**
90	10.4	10.0	9.8	7.4	7.2	6.2	5.8	5.8	5.6	4.0	4.0	4.0	**90**
95	10.0	9.8	9.6	7.4	7.2	6.0	5.8	5.8	5.6	4.0	4.0	4.0	**95**
100	9.4	9.4	9.2	7.4	7.0	6.0	5.8	5.8	5.6	4.0	4.0	4.0	**100**
105	9.0	9.0	9.0	7.4	6.8	6.0	5.8	5.8	5.6	4.0	4.0	4.0	**105**
110	8.4	8.6	8.6	7.4	6.8	5.8	5.8	5.8	5.6	4.0	4.0	4.0	**110**
115	7.6	8.2	8.4	7.2	6.6	5.8	5.8	5.6	5.6	4.0	4.0	4.0	**115**
120	7.0	7.4	7.8	6.8	6.4	5.8	5.8	5.6	5.4	4.0	4.0	4.0	**120**
125	6.2	6.8	7.0	6.6	6.4	5.8	5.6	5.4	5.2	4.0	4.0	4.0	**125**
130	5.6	6.0	6.4	6.0	6.2	5.6	5.4	5.2	5.0	4.0	4.0	4.0	**130**
135	5.0	5.4	5.6	5.4	6.0	5.6	5.0	5.0	5.0	4.0	4.0	4.0	**135**
140	4.4	4.8	5.0	4.8	5.6	5.6	4.6	4.8	4.8	4.0	4.0	4.0	**140**
145	3.8	4.2	4.4	4.2	5.0	5.6	4.0	4.6	4.6	3.8	3.8	3.8	**145**
150	3.2	3.6	3.8	3.8	4.4	5.0	3.6	4.2	4.6	3.4	3.6	3.6	**150**
155	2.8	3.2	3.2	3.4	4.0	4.4	3.2	3.8	4.2	3.0	3.6	3.6	**155**
160	2.4	2.6		2.8	3.4	3.8	2.6	3.4	3.8	2.6	3.2	3.4	**160**
165	2.0	2.2		2.4	3.0	3.2	2.2	3.0	3.2	2.2	2.8	3.2	**165**
170	1.6	1.8		2.0	2.6	2.8	1.8	2.4	2.8	1.8	2.4	2.8	**170**
175				1.6	2.2	2.4	1.6	2.0	2.4	1.4	2.0	2.4	**175**
180					1.8			1.6	2.0		1.6	2.0	**180**
185									1.4			1.6	**185**

THIS CHART IS ONLY A GUIDE AND SHOULD NOT BE USED TO OPERATE THE CRANE.
The individual crane's load chart, operating instructions and other instructional plates must be read and understood prior to operating the crane

Load chart

Manual offset swingaway

52 m (171 ft)

10-17-22-27 m
(32.8-55.8-72.3-88.6 ft)
Hydraulic luffing
stationary

19 459 kg
(42,900 lb)

7,0 m
(23 ft)
100%

360˚

Pounds x 1000

Feet	170.6 + 32.8			170.6 + 55.8			170.6 + 72.2			170.6 + 88.6			Feet
	0°	20°	40°	0°	20°	40°	0°	20°	40°	0°	20°	40°	
35	10.8												**35**
40	10.8	10.8		7.4			5.8						**40**
45	10.8	10.8		7.4			5.8			4.0			**45**
50	10.8	10.8	10.0	7.4			5.8			4.0			**50**
55	10.8	10.8	10.0	7.7	7.4		5.8			4.0			**55**
60	10.8	10.8	10.0	7.4	7.4		5.8	5.8		4.0			**60**
65	10.8	10.8	10.0	7.4	7.4		5.8	5.8		4.0			**65**
70	10.8	10.8	10.0	7.4	7.4	6.2	5.8	5.8		4.0	4.0		**70**
75	10.8	10.8	10.0	7.4	7.4	6.2	5.8	5.8	5.6	4.0	4.0		**75**
80	10.8	10.8	10.0	7.4	7.4	6.2	5.8	5.8	5.6	4.0	4.0	4.0	**80**
85	10.8	10.4	10.0	7.4	7.4	6.2	5.8	5.8	5.6	4.0	4.0	4.0	**85**
90	10.2	10.0	9.8	7.4	7.2	6.2	5.8	5.8	5.6	4.0	4.0	4.0	**90**
95	9.2	9.8	9.6	7.4	7.2	6.0	5.8	5.8	5.6	4.0	4.0	4.0	**95**
100	8.2	8.8	9.2	7.4	7.0	6.0	5.8	5.8	5.6	4.0	4.0	4.0	**100**
105	7.4	8.0	8.4	7.4	6.8	6.0	5.8	5.8	5.6	4.0	4.0	4.0	**105**
110	6.6	7.2	7.6	6.8	6.8	5.8	5.8	5.8	5.6	4.0	4.0	4.0	**110**
115	5.8	6.4	6.8	6.2	6.6	5.8	5.8	5.6	5.6	4.0	4.0	4.0	**115**
120	5.2	5.8	6.0	5.6	6.4	5.8	5.2	5.6	5.4	4.0	4.0	4.0	**120**
125	4.6	5.0	5.4	5.0	5.8	5.8	4.6	5.4	5.2	4.0	4.0	4.0	**125**
130	4.0	4.4	4.8	4.4	5.2	5.6	4.0	5.0	5.0	3.8	4.0	4.0	**130**
135	3.4	3.8	4.0	3.8	4.6	5.2	3.6	4.4	5.0	3.4	4.0	4.0	**135**
140	2.8	3.2	3.4	3.4	4.2	4.6	3.0	3.8	4.4	3.0	3.8	4.0	**140**
145	2.4	2.8	3.0	3.0	3.6	4.2	2.6	3.4	4.0	2.6	3.2	3.8	**145**
150	2.0	2.2	2.4	2.4	3.2	3.6	2.2	3.0	3.4	2.2	2.8	3.4	**150**
155	1.6	1.8	2.0	2.0	2.6	3.0	1.8	2.6	3.0	1.8	2.4	2.8	**155**
160				1.6	2.2	2.6		2.2	2.6		2.0	2.4	**160**
165					1.8	2.0		1.6	2.0		1.6	2.0	**165**
170						1.6			1.6			1.6	**170**

THIS CHART IS ONLY A GUIDE AND SHOULD NOT BE USED TO OPERATE THE CRANE.
The individual crane's load chart, operating instructions and other instructional plates must be read and understood prior to operating the crane

Symbols glossary

Axles

Counterweight

Grade

Gear

Boom

Drive

Heavy duty jib

Radius

Boom elevation

Electrical system

Hoist

Rotation

Boom extension

Engine

Hookblock

Speed

Boom length

Extension

Hydraulic system

Steering

Boom nose

Frame

Lights

Suspension

Brakes

Fuel tank capacity

Oil

Swing

Cab

Outriggers

Outrigger controls

Tires

Transmission

Notes

Notes

Manitowoc Cranes

Regional headquarters

Americas
Manitowoc, Wisconsin, USA
Tel: +1 920 684 6621
Fax: +1 920 683 6277

Shady Grove, Pennsylvania, USA
Tel: +1 717 597 8121
Fax: +1 717 597 4062

Europe, Middle East, Africa
Ecully, France
Tel: +33 (0)4 72 18 20 20
Fax: +33 (0)4 72 18 20 00

China
Shanghai, China
Tel: +86 21 6457 0066
Fax: +86 21 6457 4955

Greater Asia-Pacific
Singapore
Tel: +65 6264 1188
Fax: +65 6862 4040

Regional offices

Americas
Brazil
Alphaville
Mexico
Monterrey
Chile
Santiago

Europe, Middle East, Africa
Czech Republic
Netvorice
France
Baudemont
Cergy
Decines
Germany
Langenfeld
Hungary
Budapest
Italy
Lainate
Netherlands
Breda
Poland
Warsaw
Portugal
Baltar
Russia
Moscow
South Africa
Johannesburg
U.A.E.
Dubai
U.K.
Buckingham

China
Beijing
Chengdu
Guangzhou
Xian

Greater Asia-Pacific
Australia
Brisbane
Melbourne
Sydney
India
Chennai
Delhi
Hyderabad
Pune
Korea
Seoul
Philippines
Makati City
Singapore

Factories

Brazil
Passo Fundo
China
TaiAn
Zhangjiagang
France
Charlieu
Moulins
Germany
Wilhelmshaven
India
Pune
Italy
Niella Tanaro
Portugal
Baltar
Fânzeres
Slovakia
Saris
USA
Manitowoc
Port Washington
Shady Grove

This document is non-contractual. Constant improvement and engineering progress make it necessary that we reserve the right to make specification, equipment, and price changes without notice. Illustrations shown may include optional equipment and accessories and may not include all standard equipment.

©2012 Manitowoc
Form No.GMK4115 PG
Part No. 0307/ 0512 / 2M